JUNCTION BOXES

Thames Side

JUNCTION BOXES FOR LOAD CELLS USED IN SILO, TANK, VESSEL AND TRUCK WEIGHING

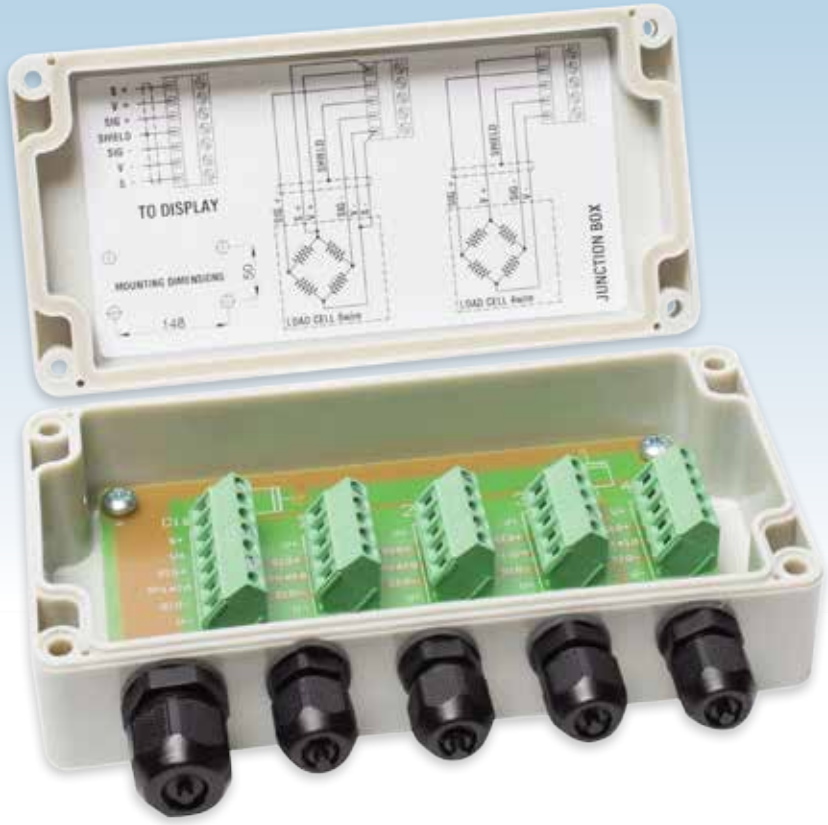

Load cell connection problems solved simply and cost effectively.

Thames Side's versatile range of junction boxes includes standard ABS models with/without trimming potentiometers, versions with ATEX certification, built-in lightning surge arrestors, stainless steel options and a version for digital load cells.

Special durable polyurethane 4-wire and 6-wire (with sense wires) connection cable can be supplied in custom lengths for connection from the junction box to the amplifier/instrument.

- 4 or 8 load cell versions
- 4 or 6 wire (sense) connections
- Hermetically sealed to IP66 or greater (IP67 available on request)
- ATEX versions for all zones
- Stainless Steel versions (including ATEX option)
- Optional built-in lightning surge arrestors
- Optional trimming potentiometers
- 5 year warranty
- Robust and cost effective
- Special load cell connection cable is available separately (per metre)
- Version for 8 digital load cells
- INTELLIGENT Junction Box also available

JUNCTION BOXES

technical specification...

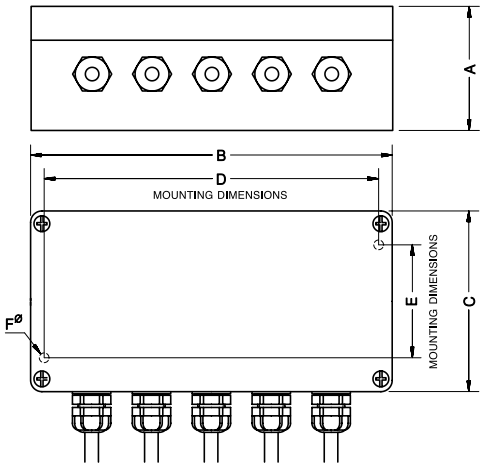

All Junction Boxes except JB4T-SS

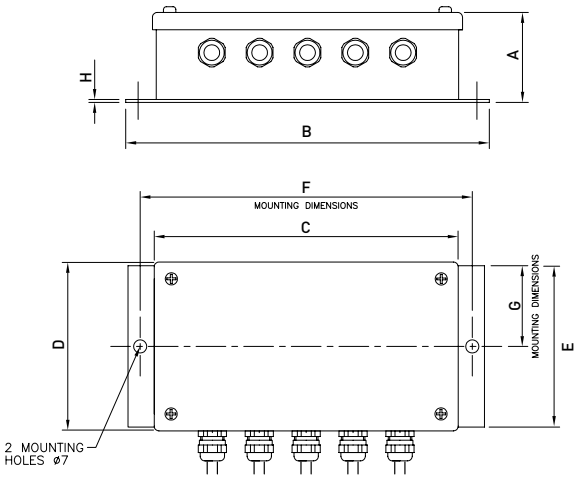

JB4T-SS only

JUNCTION BOXES

		JB4T	JB4T-PG9	JB4T-AL-SA	JB4T-SS	JB4T-ATEX	JB8T	JB8T-AL-SA	JB8T-ATEX	JB8T-DIGITAL
4 load cell connection		✔	✔	✔	✔	✔				
8 load cell connection							✔	✔	✔	✔
Trimming potentiometers		✔		✔		✔	✔	✔	✔	✔
ABS construction		✔	✔				✔			
Aluminium construction				✔		✔		✔	✔	✔
Stainless Steel construction					✔					
ATEX approved						✔			✔	
Lightning surge arrestors				✔				✔		✔
IP protection rating		IP66	IP66	IP66	IP66	IP66	IP66	IP66	IP66	IP66
Cable gland specification		PG7	PG9	PG7	PG7	PG7	PG7	PG7	PG7	PG7
Dimensions (mm)	**A**	45.5	45.5	57	47	57	60	52	52	60
	B	160	160	175	190	175	240	250	250	240
	C	80	80	80	162	80	80	80	80	80
	D	148	148	163	90	163	228	238	238	228
	E	50	50	52	86	52	50	52	52	50
	F	4.2	4.2	4.8	177	4.8	4.2	4.8	4.8	4.2
	G	-	-	-	43	-	-	-	-	-
	H	-	-	-	1.5	-	-	-	-	-
Nominal Shipping Weight (kg)		0.4	0.4	0.8	1	0.8	0.7	1	1	0.7

Certification details: JB4T-ATEX and JB8T-ATEX

Certification Code	Temp. Class	Parameters		Application
II 1 GD Ex ia IIC T4...T6 Ga Ex ia IIIC T135°C.. T185°C Da Ex ta IIIC T85°C Da	T4	Ta ≤ 40 °C; Pi = 1.8W	Ta ≤ 60 °C; Pi = 1.8W	Gas Zones 0, 1, 2 Dust Zones 20, 21, 22
	T5	Ta ≤ 40 °C; Pi = 1.2W	Ta ≤ 60 °C; Pi = 1.0W	
	T6	Ta ≤ 40 °C; Pi = 0.45W	Ta ≤ 60 °C; Pi = 0.23W	
II 3G Ex nA IIC T6 Gc -20°C ≤ Ta ≤+60°C	-	Umax (max. supply voltage) = 25V		

Ambient temperature range for ATEX use: -20°C ≤ Ta ≤ +60°C

JB4T-AL-SA



JB4T-SS



JB8T-ATEX



DISTRIBUTED BY:

MECO
MEASUREMENTS & CONTROLS

Via Enrico Cernuschi, 4 20129 Milano
Tel. +39 02 4 692 680 Fax +39 02 4 694 602 info@mecoitalia.it www.mecoitalia.it

Issue: JncBx.08.17

Our policy is one of continuous product enhancement. We therefore reserve the right to incorporate technical modifications without prior notification.