SS4000M Series

Miniature Universal Load Cell

Sherborne Sensors
.... the first choice in precision

Introduction

The U4000M ultra miniature load cell is equally suitable for tension or compression applications and is especially useful where space is limited. The internal construction consists of a full bridge of transducer quality strain gauges that are bonded to the transducer element. This element is manufactured from high strength aluminium alloy or stainless steel, depending on the force range. The design incorporates side load and bending moment rejection; despite its small size the transducer is highly accurate. Specially optimised OEM versions of the load cell are available for high volume applications.

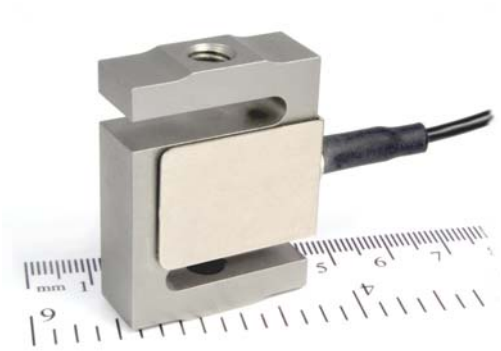

Applications

- Materials test
- Bi-directional force monitoring
- General in-line force monitoring in limited space applications

Features

- Available in ranges from ±10N (2.25 lb) to ± 500N (112 lb)
- Miniature, only 35mm (1.38") high
- Incorporates bending moment and side load compensation
- Manufactured in ISO 9001:2008 and AS9100B conditions
- 100% tested and supplied with an individual calibration certificate
- High stiffness and low deflection under load
- Male Rod End Bearings available (quote Option R – see below for dimensions)

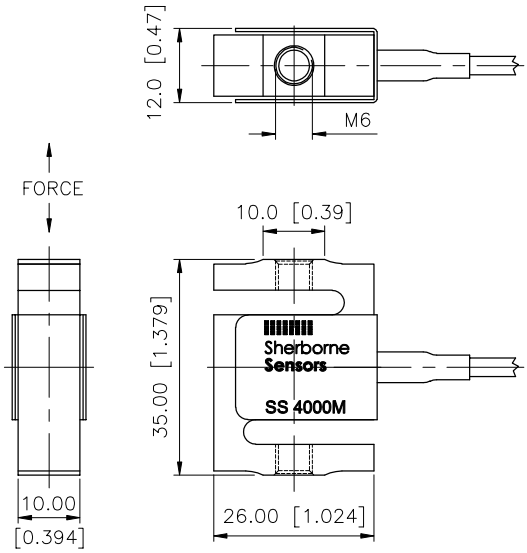

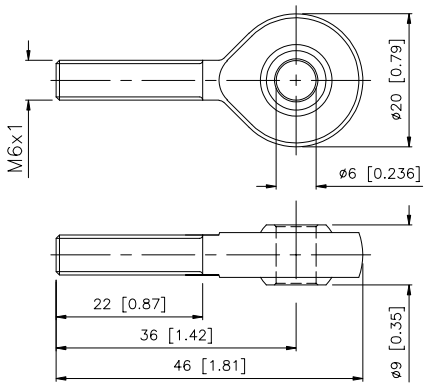

Certified System
ISO 9001
AS 9100
UKAS QUALITY MANAGEMENT
2 YEAR WARRANTY

MECO MEASUREMENTS & CONTROLS
Via Enrico Cernuschi, 4 20129 Milano
Tel. +39 02 4 692 680 Fax +39 02 4 694 602 info@mecoitalia.it www.mecoitalia.it

Specifications

Environmental Characteristics							
Operating Temperature Range	°C (°F)	-10 to +60 (14 to 140)					
Survival Temperature Range	°C (°F)	- 40 to +80 (-40 to 144)					
Environmental Sealing	IEC529	IP54					

Specifications @ +20°C (+68°F)							
Rated Range	N	± 10	± 20	± 50	± 100	± 200	± 500
Rated Range	lb	± 2.3	± 4.5	± 11.2	± 22.5	± 45	± 112
Operational Mode		Tension / Compression					
Recommended Excitation Voltage	Volts dc	10					
Maximum Excitation Voltage	Volts dc	12					
Full Scale Output (see note 1)	mV/V (nom)	± 2					
Signal Polarity		Positive in Tension					
Non-Linearity (see note 2)	%FRO (max)	± 0.05					
Zero Return (see note 3)	% FRO (max)	± 0.01					
Input Resistance	Ω (nom)	375					
Output Resistance	Ω (nom)	350					
Overload Capacity	% Rated Range (max)	150					
Side Load	% Rated Range (max)	50					
Deflection at Rated Load	mm (inches)	0.19 (0.007)	0.14 (0.006)	0.10 (0.004)	0.10 (0.004)	0.08 (0.003)	0.06 (0.002)
Thermal Zero Shift	%FRO/°C (%FRO/°F) (max)	≤ ± 0.010 (0.005)					
Thermal Sensitivity Shift	%Reading/°C (%Reading/°F)(max)	≤ ± 0.002 (0.001)					
Documentation		Individual Calibration Data Sheet					
Electrical Connection		1 metre (3 foot) 4-conductor shielded cable					

Notes
1. Units supplied calibrated as standard in tension only, bi-directional calibration available on request
2. Non-linearity is determined by the method of least squares
3. Zero return is the zero offset after a full scale excursion and return to zero load

Electrical Connections

Red	Excitation +
Black	Excitation -
Green	Signal Output +
White	Signal Output -
Shield	Not connected

MODEL DESIGNATION & ORDERING CODE

SS4000M - ☐ ☐

Enter Force Range (N)

Options:
'R' M6 male rod end bearing

Sherborne Sensors
.... the first choice in precision

MECO MEASUREMENTS & CONTROLS
Via Enrico Cernuschi, 4 20129 Milano
Tel. +39 02 4 692 680 Fax +39 02 4 694 602 info@mecoitalia.it www.mecoitalia.it