Liquid Level Transmitter

MODEL 359



The Model 359 tank level transmitter has been designed to dramatically improve CIP/SIP recovery time. Using hydrostatic pressure to determine liquid level, the 359 ensures accurate and reliable measurement in ranges from 33" WC to 750" WC.

FEATURES

- All welded construction
- 316L SS wetted parts
- Ranges down to 20"
- WC full scale
- High accuracy

TYPICAL APPLICATIONS

- Fuel tank level
- Chemical tank level
- Gas compressors
- Chemical processing

Approval Options Available

A SMART, CLEAN FREAK TANK LEVEL TRANSMITTER

SLOWS GREASE & GRIME BUILD UP

When tanks are cleaned using liquids at temperatures exceeding 200º F, sensors generally require five to ten minutes to recover before maintaining accurate readings. The Model 359 recovers in less than one minute, minimizing costly down time and wasted process media due to inaccurate readings.

The Model 359 fits tank receivers or fittings in use on most sanitary equipment. The transmitter also comes in three different lengths for varying tank wall thickness.

CORROSION PROTECTION

The 359 comes in different mods to provides excellent protection against corrosion. With a flush diaphragm, it is specifically designed for CIP and SIP systems and is approved by 3A as suitable for use with milk or milk products.

3A APPROVED SANITARY TRANMITTER

The 359 meets USDA guidelines for meat and poultry processing equipment. This hermetically sealed enclosure has internal and external magnets that function as adjustments for zero, span, calibration, and a fine-tuning zero adjustment not found in other transmitters. The 359 also features an internal calibration circuit with 3 to 1 span ranging for easy field set-up.
Viatran manufactures a complete line of pressure transmitters for all your sanitary applications.

Viatran
A DYNISCO COMPANY

An ISO 9001 Certified Company

SPECIFICATIONS

PERFORMANCE

Full Scale Pressure Range (FSPR)	0-100", 300", 750", 900" WC
Non-linearity (best fit straight line)	≤±0.15% FSO
Hysteresis and repeatability	≤±0.10% FSO
Full Scale Output (FSO)	16 mA
Resolution	Infinite
Long Term Stability	≤±0.25% FSO per 6 months
Response Time (mechanical and electrical combined)	≤10 mSec to reach 90% FSO
Thermal recovery time	50 Sec to reach 90% FSO
Temperature Effect on Zero	≤±1.5% FSO per 100°F
Temperature Effect on Span	≤±1.5% FSO per 100°F
Temperature Effect on Calibration Signal	≤±2.0% FSO per 100°F
Compensated Temperature Range	35°F to +170°F
Process Temperature Limits	-20°F to +220°F
Ambient Temperature Limits	-40°F to +190°F
Storage Temperature Limits	-40°F to +250°F

ELECTRICAL

Sensor Technology	Silicon Piezorestictive
Supply Voltage	12 to 40 VDC
Power Supply Regulation	≤±0.01% FSO per volt
Output Signal	4 to 20 mA
Load Impedance	1500 Ohms max at 40 VDC
Zero Balance	4 mA ±1% FSO
Zero Adjustment	-100% FSPR (elevation) to 80% FSPR (suppression). Coarse and fine adjustments standard.
Span	20 mA ±1% FSO
Span Adjustment	3:1 Ranging
Range Calibration Signal	30% of FSPR , externally switched
Calibration Signal Accuracy	≤±0.2% FSO. The exact signal to pressure correlation is provided with each unit.
Circuit Protection	Varistor protected across the input leads for surges above 55V and currents to 250 Amps peak with a pulse width of 8 to 20 µsec. Reverse polarity protected.
Insulation Resistance	≥ 200 MegOhms to case ground
RFI/EMI Suppression	Negligible effect to 500 Mhz at 5 watts direct contact
Electrical Connection	1/2" NPT (M), 3 wires, 18 AWG, 36" Length
Red	+Power/Signal
Black	-Power/Signal
Green	Case Ground

MECHANICAL

Pressure Connection	Flush mount sensor mates with King Engineer tank shell #1777
Proof Pressure	3x rated range
Burst Pressure	5x rated range
Oil Fill	Less than 0.66 ml of DC 200 silicone oil
Measured Fluids	Any gas or liquid compatible with 316 stainless steel and silicone O-Ring
Weight	4 lbs. nominal
Enclosure Materials	316L stainless sleel
Wetted Materials	316L stainless sleel
Identification	Laser etched onto body

CERTIFICATIONS

Consult Factory for Availability	
Enclosure Classification	NEMA 4X, 5, 6, 12
Sanitary Standards Council	Authorized to display the 3A symbol for conformity to sanitary standards for sensor, sensor fittings and connections used on milk and milk product equipment (#74-00)

OPTIONS

Codes	*Descriptions*
NSR	Non Standard Ranging
HD	Short length for single wall tanks
HE	Extra long length for King Receiver #1777-3
GA	Viton O-Ring
GB	Teflon O-Ring
GE	Buna-N O-Ring

ADAPTERS

Codes	
HB	2" Tri Clover
HC	2 1/2" Tri Clover
HG	3" Tri Clover
HI	2" NPT
HJ	Cherry-Burrell (standard shell)
HK	Tank Mate (long shell)
HL	2" Cherry-Burrell I-Line
HM	2 1/2" Cherry-Burrell I-Line
HN	Anderson (standard shell)
HP	Anderson (long shell)
HS	1/4" NPT
HT	Cherry-Burrell (short shell)
HU	1/2" NPT
HV	Taylor

Note: Application of some available options may affect standard performance. Consult your Viatran Representative for details.

ACCESSORIES

Mounting Bracket
Conduit Connection Box
Loop Powered Digital Indicator
Protective Cover

Model	"L" ± 10	"M" ± 10
359 STD (AA)	10.86	6.53
359 (HD)	6.46	2.13
358 (HE)	13.11	8.78

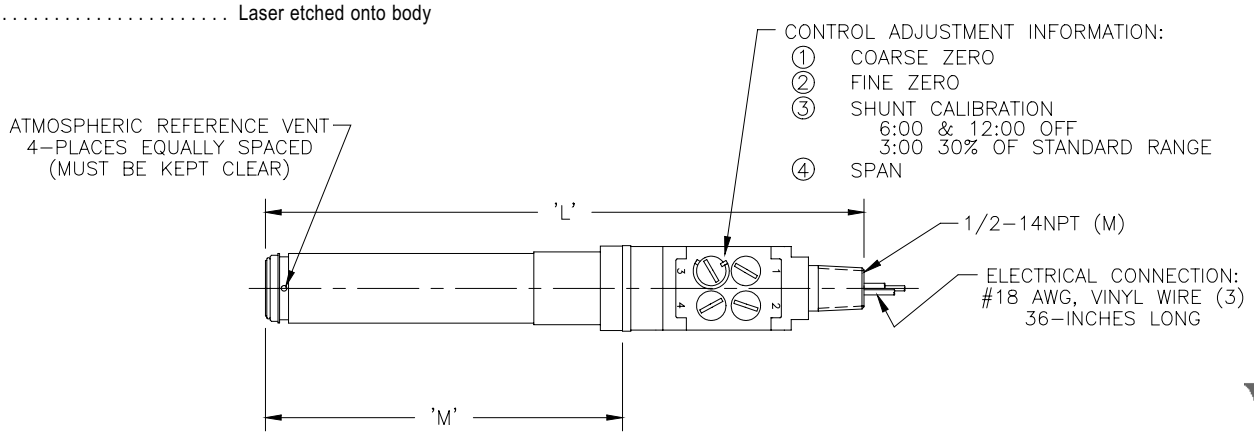

MECO MEASUREMENTS & CONTROLS
Via Paolo Uccello, 4 20148 Milano
Tel. +39 02 4 692 680 Fax +39 02 4 694 602 info@mecoitalia.it www.mecoitalia.it