PRESSURE TRANSMITTER

Model 555



FEATURES

- **Hermetically sealed external controls**
- **Built-in field calibration signal**
- **All welded, watertight submersible construction**
- **4-20 mA**
- **Flush abrasion resistant diaphragm suitable for pipe saddle mounting**

TYPICAL APPLICATIONS

- **Shipboard/Marine**
- **Pulp and Paper**
- **Chemical Processing**
- **Slurries**
- **Sludge**

COMPACT AND COMPLETELY SEALED

The Viatran 555 is designed to withstand harsh atmospheres including submersion to 100 feet. The all-welded construction, with magnetically-coupled zero and span potentiometers, ensures the water-tight integrity of the high-reliability electronics.

The 555 design allows easy installation in pipelines of abrasive slurries or sludge for pump monitoring. The Inconel X750 diaphragm material ensures long life in

diaphragm material ensures long life in abrasive slurries. Using a pipe saddle with integral shutoff, the 555 can be installed wet in less than an hour from start to finish.

IN-FIELD SETUP AND RANGING

A calibration circuit permits ranging and setup without a calibrated pressure source. When the cal switch is activated, an electronic signal is sent through the unit, simulating the level or pressure.

JUST ONE PART OF A COMPLETE LINE OF SOLUTIONS FROM VIATRAN

The signal conditioner in the 555 allows for 4:1 ranging of the transmitter's standard pressure range. The 555 represents one transmitter in a family of sensors designed for the process control industry.

CE

MECO MEASUREMENTS & CONTROLS
Via Paolo Uccello, 4 20148 Milano
Tel. +39 02 4 692 680 Fax +39 02 4 694 602 info@mecoitalia.it www.mecoitalia.it

PERFORMANCE

Full Scale Pressure Range	0-50 thru 0-500 PSIS
Non-Linearity (Best Fit Straight Line)	≤±0.25% FSO
Hysteresis & Repeatability	≤0.1% FSO
Full Scale Output (FSO)	16 mA at 70°F (21°C)
Zero and Span Balance	±0.5% FSO
Resolution	Infinite
Long Term Stability	≤±0.50% FSO per year FSO per 6 months
Response Time (Mechanical and Electrical Combined)	<20 milliseconds to reach 90% of Full Scale
Temperature Effect on Zero and Span	
Temperature Effect on Zero	±1% FSO per 100°F (37°C)
Temperature Effect on Span	±1% FSO per 100°F (37°C)
Combined at 4:1 Range Down	≤±4.0% FSO per 100°F (37°C)
Compensated Temperature Range	70°F to 170°F (21°C to 77°C)
Maximum Operating Temperature	185°F (85°C) - Ambient
	250°F (121°C) - Fluid
Minimum Operating Temperature	-40°F (-40°C)
Storage Temperature Limits	-65°F to 250°F (-53°C to 121°C)

ELECTRICAL

Supply Voltage	12 to 30 Vdc
Power Consumption	≤±0.02% FSO per volt
Output Signal	4-20 mA at 70°F (21°C)
Load Impedance	900 Ohms maximum at 30 Vdc
Zero Adjustment	
Elevation	-100% of FSO
Suppression	+50% of FSO
Span Adjustment	Rangeable down 4:1 from standard range
Range Calibration Signal	20% of FSPR externally switched
Calibration Signal Accuracy	±1.0% FSO. The exact signal to pressure correlation is provided with each unit.
Circuit Protection	Varistor protected across the input leads for surges above 40V and currents to 250 Amps Peak with a pulse width of 20 µSec. Reverse polarity protected
Bridge Resistance	5K Ohms nominal
Insulation Resistance	≥200 MegOhms to case ground (≤5 nS)
RFI/EMI	Negligible to 500 MHz at 5 Watts direct contact
Electrical Connection	1/2" NPT (M), 18 AWG, 72"
Red	+Power/Signal
Black	-Power/Signal
Green	Case Ground

MECHANICAL

Pressure Connection	
100-1000 PSI	Flush diaphragm
Proof Pressure	1.5 times URL
Burst Pressure	≥3 times URL
Shock Limitation	100 g's
Weight	70 oz (2 kg)

MATERIALS OF CONSTRUCTION

Enclosure Material	Inconel X750 and 316L stainless steel
Wetted Materials	Inconel X750 and 316L stainless steel
Enclosure Classification	NEMA/Type 4X (1P68)

CERTIFICATIONS (Consult Factory for Available Options)

FM	Intrinsic Safety: Class I, II, III, Division 1, Groups A-G, and AEx ia IIC, T4 at Ta=80ºC, T5 at Ta=40ºC, Indoor and Outdoor NEMA/Type 4X Hazardous Locations
	Nonincendive: Class I,II,III Div. 2, Groups A-G and Class I, Zone 2, Group IIC, T4 at Ta=80ºC, T5 at Ta=40ºC
CSA (Pending)	Intrinsic Safety: Class I, Div. 1, A-D Class II, E-G, Class III, Ex ia IIC T4 at Ta=80ºC, T5 at Ta=40ºC
ATEX	Intrinsic Safety: II 1 G EEx ia IIC, -20ºC T4, Ta 50ºC
CE	EMC Directive 89/336/EEC and Low Voltage Directive 72/23/EEC
	EN 61010-101993/A2:1995: Low Voltage Standard
	EN 61326: EMC Conformity Standard
	PED Directive 97/23/EC EMC Directive 89/336/EEC

OPTIONS

Codes	
BB	Mini change electrical connector
BP	Micro change electrical connector
CL	Extra lead length (6 ft standard)
DG	Improved temperature and compensation
DK	Special shunt calibration
EA	Special calibration run
NG	ATEX Flameproof label
NH	Customer specified identification
NJ	CE label
NK	ATEX Intrinsic Safety label
NSR	Non standard range
NX	CSA Intrinsic Safety label
NZ	FM Nonincendive label
TF	FM Intrinsic Safety label
TJ	CSA Div / Zone 2
TW	GOST Approval
VD	G2" retaining nut
Z ( )	Alternate electrical connection
ZU	Direct coupled cable

ACCESSORIES

Pipe Saddle with shutoff
Conduit connection box
Calibration text fixture

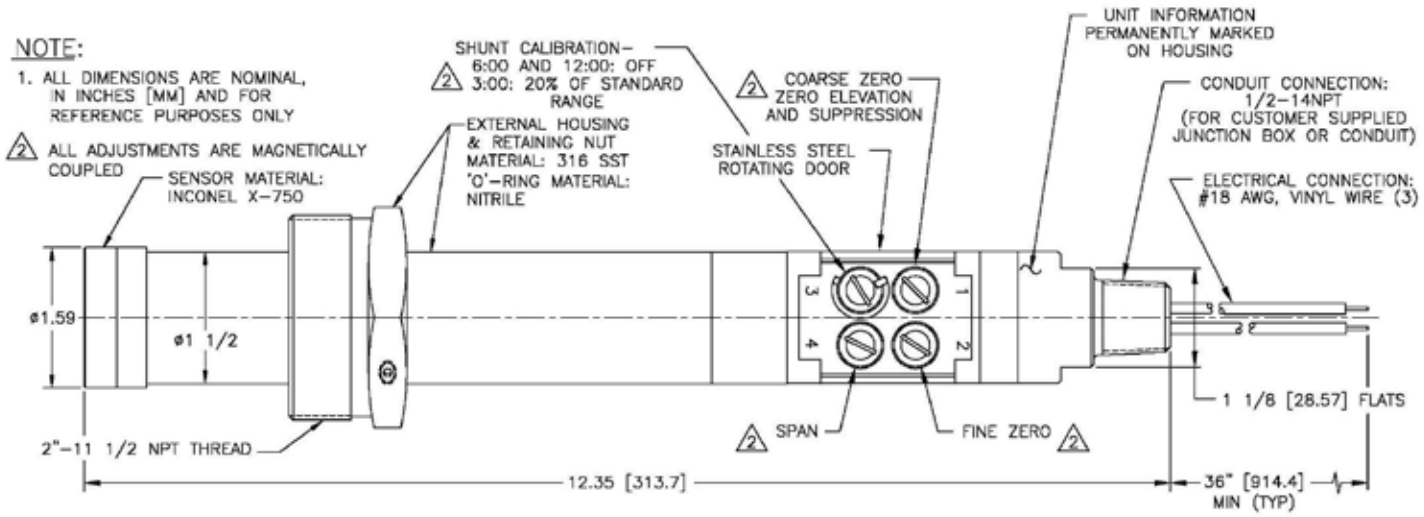

Information is accurate to the best of Viatran's knowledge. We reserve the right to change specifications at any time.

98PB120555 06/10

MECO MEASUREMENTS & CONTROLS
Via Paolo Uccello, 4 20148 Milano
Tel. +39 02 4 692 680 Fax +39 02 4 694 602 info@mecoitalia.it www.mecoitalia.it
Viatran A Dynisco Company