LEVEL TRANSMITTER

Model 517



FEATURES

- Submersible
- Less than 7/8” diameter
- Corrosion resistant construction
- Ranges from 30” WC to 1,200 ft WC/500 PSI (34 bar)
- Intrinsically Safe design available
- All stainless steel construction

TYPICAL APPLICATIONS

- Methane gas wells
- Down hole water wells
- Inground and underground tanks
- Water and sewage treatment plants
- Reservoirs / Dams
- Marine / Shipboard
- Chemical waste ponds

HYDROSTATIC HEAD PRESSURE TO ACCURATELY MEASURE LEVEL

If you choose to measure level through hydrostatic head pressure, then you can’t do better than the Model 517 from Viatran. The Model 517 promises an accuracy to 0.1%.

And it’s submersible. Meaning you can throw it in the tank and not worry about some of the things that Process Engineers have to worry about - like the fog rolling in. The Model 517 will send you a reliable 4 to 20 mA output.

WHAT DOES RUGGED REALLY MEAN?

The Model 517 has been engineered to survive in hostile media. We’re confident you can depend on the 517. Internal circuitry provides lightning protection, while a 4 to 20 mA output signal minimizes potential outside interference and signal degradation. All of this is critical if the signal needs to travel over long cable lengths (as in groundwater studies).

RUGGED FEATURES

The unique Viatran cable seal ensures watertight integrity up to 500 PSI (34 bar). Other potential leak paths are avoided by Viatran’s all-welded sensor design. This design eliminates the O-ring seal.

OPTIONAL 1/4” NPT PRESSURE PORT

A removable end cap comes standard on the Model 517. However, if weight is needed, heavier end caps are available. The optional 1/4” NPT pressure port is ideal for checking unit calibration against a known pressure source.

FM

MECO MEASUREMENTS & CONTROLS
Via Paolo Uccello, 4 20148 Milano
Tel. +39 02 4 692 680 Fax +39 02 4 694 602 info@mecoitalia.it www.mecoitalia.it

PERFORMANCE

Full Scale Pressure Range (FSPR) .....0-3, 5, 10, 15, 30, 50, 100, 200, 300, 500 PSI
.....0-7, 12, 23, 35, 69, 115, 230, 462, 693, 1154 feet of water column

Accuracy Combined

Linearity, Hysteresis & Repeatability .....≤±0.1% FSO typical (±0.25% FSO max)
Hysteresis & Repeatability .....≤±0.05% FSO
Full Scale Output (FSO) .....16 mA
Resolution .....Infinite
Zero Balance .....4 mA ±0.25% FSO
Long Term Stability .....≤±0.20% FSO per year
Response time.....≤1 mSec
Temperature Effect on Zero .....≤±1.0% 100°F (37°C)
Temperature Effect on Span .....≤±1.0% 100°F (37°C)
Compensated Temperature Range .....32°F to 180°F (0°C to 82°C)
Operating Temperature.....-40°F to 185°F (-40°C to 85°C)
Storage Temperature Range .....-40°F to 250°F (-40°C to 121°C)

ELECTRICAL

Supply Voltage.....9 to 30 Vdc
Power Supply Regulation.....≤±0.0001% per Volt
Output Signal .....4 to 20 mA
Span.....<0.25% FSO
Circuit Protection .....Reverse polarity protected. Over-voltage protected to 1000V <1
.....mSec duration
Electrical Connection.....3 wire, 22 AWG
Red.....+Power/Signal
Black .....-Power/Signal
Bare.....Case ground

MECHANICAL

Pressure Connection.....5/8" - 18 UN female thread with protective end cap installed
Proof Pressure.....3 times rated range
Burst Pressure.....5 times rated range
Diameter .....0.875 inches
Weight .....Pressure capsule 10 oz.
Cable Weight.....11.3 lbs per 1000 feet (Polyurethane)

MATERIALS OF CONSTRUCTION

Housing .....316L stainless steel
Pressure Connection Sensor.....316L stainless steel
Cable Options.....316L stainless steel
Mounting.....Polyurethane, Tefzel
Identification.....Laser etched onto body
Cable Strength.....Poly Wire - 30 lbs; Support Line - 100 lbs

CERTIFICATIONS (Consult Factory for Available Options)

FM	Intrinsic Safety Class I, II, III, Div. 1, Groups A thru G and AEx ia IIC T4, Indoor and Outdoor NEMA 4X Hazardous Locations
CSA	Intrinsic Safety Class I, Div.1, Ex ia IIC T4 Type 4 Enclosure

OPTIONS

Codes

DH.....Special range
DN.....Improved accuracy
EA.....Special calibration run
NH.....Customer specified identification
NR.....Alternate protection baffle plate with weight hook (max weight 2 lbs)
TG.....CSA and FM Intrinsically Safe design

Note: Application of some available options may affect standard performance. Consult your Viatran Representative for details.

ACCESSORIES

Breather tube filer
Panel mount digital display
Pressure test fitting (1/4" NPT (F) screws into end cap threads)
Desiccant tube kit

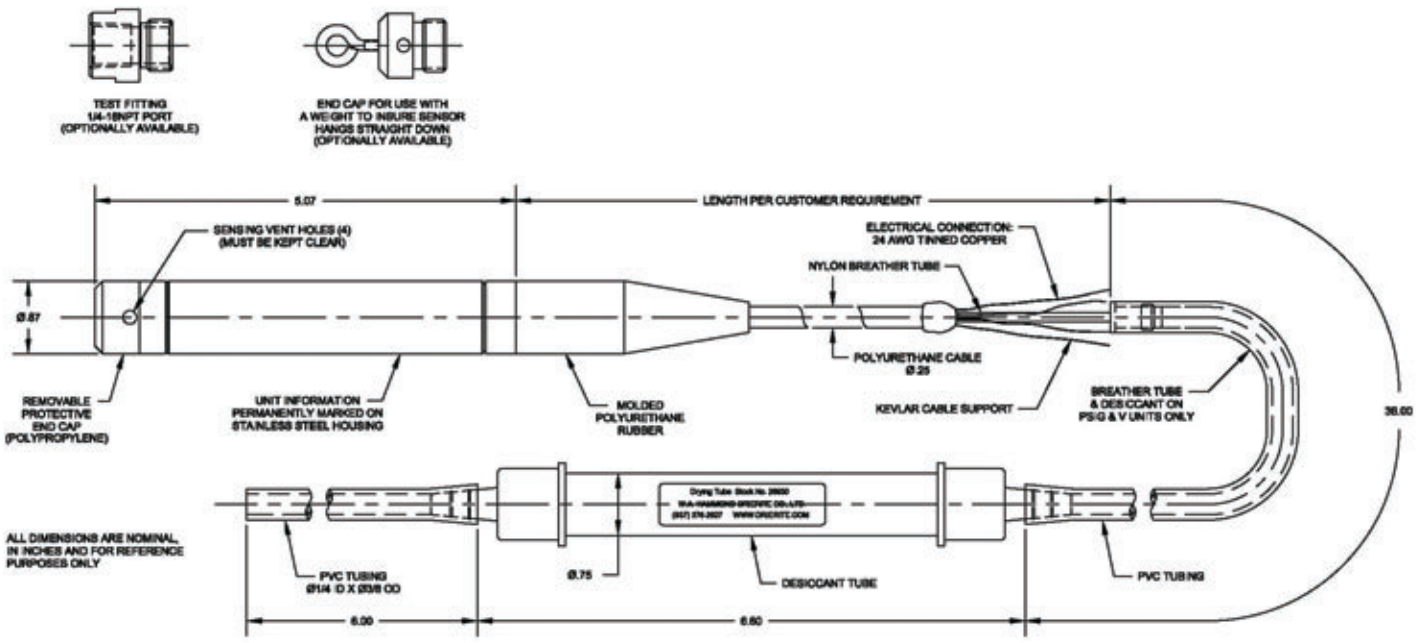

Information is accurate to the best of Viatran's knowledge. We reserve the right to change specifications at any time.
98PB335517 11/12

MECO MEASUREMENTS & CONTROLS
Via Paolo Uccello, 4 20148 Milano
Tel. +39 02 4 692 680 Fax +39 02 4 694 602 info@mecoitalia.it www.mecoitalia.it
Viatran A Dynisco Company

LIQUID LEVEL TRANSMITTER

Model WW517



FEATURES

- All welded construction
- 316L SS wetted parts
- Ranges down to 30" WC full scale
- High accuracy

TYPICAL APPLICATIONS

- Waste water
- Ballast tanks
- Shipboard
- Tank farms

STOPS SLUDGE FROM CLOGGING

Sludge plugs standard submersible transmitters, causing the sensor to fail. The design of the WW517 stops this from occurring.

The all welded 316L design eliminates potential leak paths. Our unique cable seal ensures that the watertight integrity of the unit up to 500 PSI (34 bar). The Model WW517's internal circuitry provides voltage surge (lightning) protection, while the 4 to 20 mA output signal minimizes potential outside interference and signal degradation. This feature is important when the signal travels over long cable lengths. The Model 517 also has available an Intrinsically Safe design.

The Model WW517 is a 316L liquid level transmitter with a 3" diameter opened faced Teflon coated sensor for waste water applications.

MECO MEASUREMENTS & CONTROLS
Via Paolo Uccello, 4 20148 Milano
Tel. +39 02 4 692 680 Fax +39 02 4 694 602 info@mecoitalia.it www.mecoitalia.it

PERFORMANCE

Full Scale Pressure Range (FSPR)	0-3, 5, 10, 15, 30, 50, 100, 200, 300, 500 PSI
	0-7, 12, 23, 35, 69, 115, 230, 462, 693, 1154 feet of water column
Accuracy Combined	
Linearity, Hysteresis & Repeatability	≤±0.1% FSO typical (±0.25% FSO max)
Full Scale Output (FSO)	16 mA
Resolution	Infinite
Zero Balance	4 mA ±0.08 mA
Span	16 mA ±0.08 mA
Long Term Stability	≤±0.20% FSO per 6 months
Temperature Effect on Zero	≤±2.0% 50°F (10°C)
Temperature Effect on Span	≤±2.0% 100°F (37°C)
Compensated Temperature Range	40°F to 120°F (4°C to 48°C)
Operating Temperature	20°F to 185°F (-7°C to 85°C)
Storage Temperature Range	20°F to 200°F (-7°C to 93°C)

ELECTRICAL

Supply Voltage	9 to 30 Vdc
Power Supply Regulation	≤±0.0001% FSO per Volt
Output Signal	4 to 20 mA
Maximum Load Resistance	≤1050Ω maximum @ 30 Vdc
Circuit Protection	Reverse Polarity Protected. Over-voltage protected to 1000V < 50 microseconds
Electrical Connection	3 wire, 22 AWG
Red	+Power/Signal
Black	-Power/Signal
Bare	Case ground

MECHANICAL

Pressure Connection	2.9" flush sensing diaphragm (Teflon coated)
Proof Pressure	3 times rated range
Burst Pressure	5 times rated range
Diameter	4 inches O.D.
Weight	24 oz
Cable Weight	7 lbs per 1000 feet (polyurethane)

MATERIALS OF CONSTRUCTION

Housing	316 stainless steel
Pressure Connection	316 stainless steel
Sensor	316 stainless steel, Teflon coated
Cable Options	Polyurethane, Tefzel
Identification	Laser etched onto body
Cable Strength	Poly Wire - 30 lbs; Support Line - 100 lbs

Model WW517

CERTIFICATIONS (Consult Factory for Available Options)

FM	Intrinsic Safety: Class I, Div 1, Groups A, B, C, D T4 Ta=80C; Class I, Zone 0, A Ex ia, IIC, T4 Ta=80C
CSA	Intrinsic Safety: Class I, Div 1, Groups A, B, C, D T4 Ta=80C; Class I, Zone 0, Ex ia, IIC, T4 Ta=80C

OPTIONS

Codes

DH.....Special range
EA.....Special calibration run
NH.....Customer specified identification
NR.....Alternate protection baffle plate
TG.....CSA and FM Intrinsically Safe design (consult factory)

Note: Application of some available options may affect standard performance. Consult your Viatran Representative for details.

ACCESSORIES

Pump management system
Panel mount digital display
Pressure test fitting
Lightning arrestor
Baffle plate

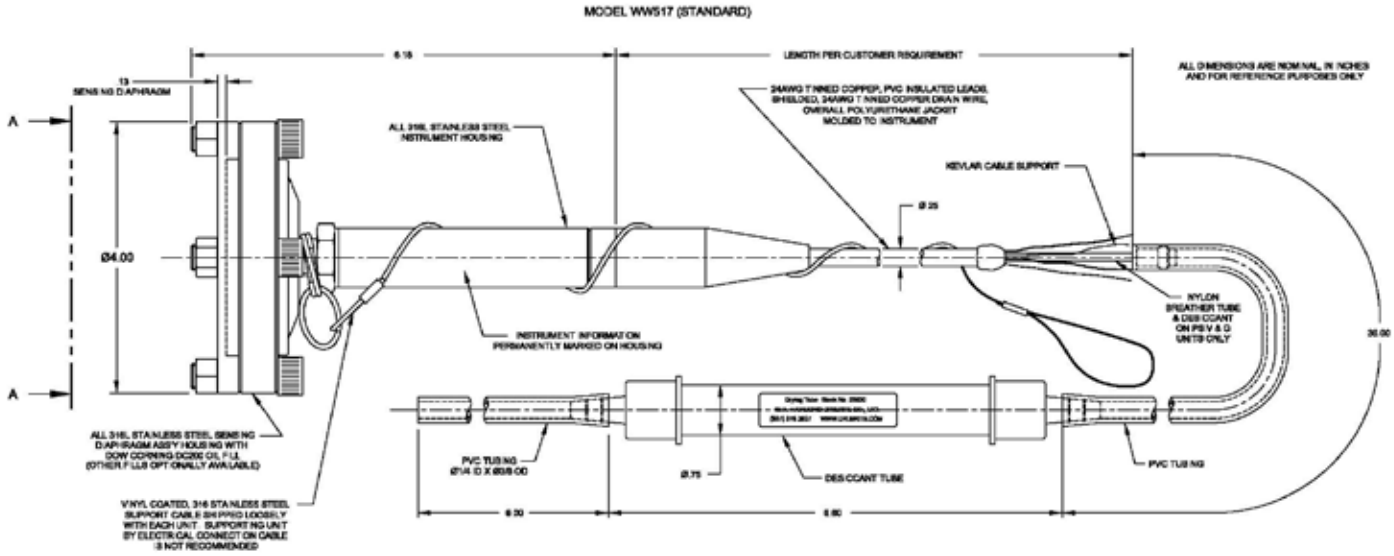

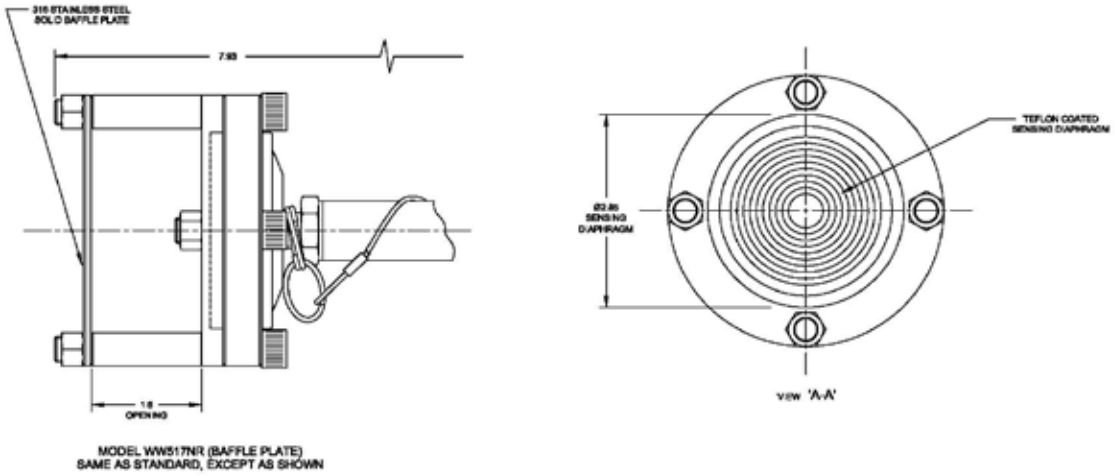

MODEL WW517N/R (BAFFLE PLATE)
SAME AS STANDARD, EXCEPT AS SHOWN

Information is accurate to the best of Viatran's knowledge. We reserve the right to change specifications at any time.
98PB3WW517 07/10

MECO MEASUREMENTS & CONTROLS
Via Paolo Uccello, 4 20148 Milano
Tel. +39 02 4 692 680 Fax +39 02 4 694 602 info@mecoitalia.it www.mecoitalia.it
Viatran A Dynisco Company